THE PUBLISHING HOUSE
OF THE ROMANIAN ACADEMY

PROCEEDINGS OF THE ROMANIAN ACADEMY, Series A,
Volume 15, Number 3/2014, pp. 292–299

GENERATION OF STATIONARY GAUSSIAN TIME SERIES COMPATIBLE WITH GIVEN POWER SPECTRAL DENSITY

Marius GIUCLEA [1,2], Ana-Maria MITU [1], Ovidiu SOLOMON [2]

[1] Institute of Solid Mechanics of the Romanian Academy, 15 Constantin Mile St., 70701, Bucharest, Romania
[2] Bucharest University of Economic Studies, Department of Mathematics, 6 Romana Square, Bucharest, RO-010374, Romania
Ana-Maria Mitu, mitu@imsar.bu.edu.ro

In this paper, an improved method for simulation wide-sense stationary random time-series, derived from either analytical or experimental descriptions of its power spectral density (PSD), is presented. In the proposed approach, the sample functions of the target random process are represented by a superposition of statistically independent sine random signals with uniformly distributed phase angles and random envelopes following Rayleigh distributions. The simulated random processes are asymptotically Gaussian processes as the number of terms approaches infinity. This property is not generally true when the standard representation through a series of random harmonic waves with uniformly distributed phases is employed, as is the case of random signals with PSD displaying sharp peaks. The proposed method is illustrated for analytical forms of road input spectral densities that can or cannot be generated by linear shape filters such as are rational functions or split power approximations, respectively. The method is validated by comparison of spectral response of a quarter car model, obtained by numerical simulation for a generated road profile input with that obtained analytically by using input-output relationships for linear oscillating systems.

Key words: power spectral density, random time series simulation, Rayleigh distribution, road input, quarter car model.

1. INTRODUCTION

In many practical applications, it is necessary to simulate samples of stationary Gaussian stochastic process compatible with given power spectral density, which has specific analytical form or is obtained by fitting experimental data. There are cases in which the sample functions can be generated with satisfactory approximation as the output of linear shape filters to band-limited white noise input. For instance, sample functions of a stationary random process with PSD expressed by polynomial ratio (depending on ω^2), can be obtained as the output of linear shape filters to white noise input [1, 2, 3, 4, 5]. On the other hand, in many cases of practical interest, as is the case of split power law proposed in ISO 8608 [6] for road roughness classification, the problem is that road inputs cannot be simulated by this method [5]. Another approach for generating time series which are required to satisfy a given PSD function, consists in their representation as finite series of harmonic frequency components with amplitudes derived from the target spectral density values, having uniformly distributed random phases [4, 7, 8, 9]. The main drawback of this approach is that the sample distribution function of the simulated random processes is not generally Gaussian even for large values of N. For example, this shortcoming can occur when the target PSD displays sharp peaks.

In this paper, a new approach to the simulation of wide-sense stationary random time series, defined by its PSD, is presented. The proposed method is based on the fact that the Rayleigh distribution is the limiting distribution function of peak values for a narrow–band Gaussian random signal as the bandwidth approaches zero [10, 11]. Accordingly, the sample functions of the target random process are represented by a superposition of N weighted statistically independent harmonic random signals with uniformly distributed phase angles and random envelopes following Rayleigh distributions. The parameters of these distributions are determined from the given PSD in a similar way as the amplitudes of the harmonic components are estimated in the framework of standard method. The weighting coefficients are used to compensate the band-

pass filtering effects on Rayleigh distribution parameters. As the simulated sine waves components can be considered with good accuracy as statistically independent random processes following Gaussian distributions [12], the sample distribution function of the simulated processes is practically Gaussian even for relatively small values of N. The proposed method can be applied for any analytical or experimental description of the given spectral density. In this paper the method is applied to generate sample functions of random inputs induced by road irregularities with PSD specified by a rational expression of ω^2. In the considered application, the spectral densities of numerically generated random time series are estimated by using third-octave band-pass filters. The method is validated by comparing the spectral response of a quarter car model, obtained by numerical simulation for a generated road profile input with that obtained analytically by using input-output relations for linear oscillating systems.

2. ANALYTICAL DESCRIPTION OF SIMULATION METHOD

Consider a Gaussian stationary stochastic process $y(t)$ and $G(\omega)$ its one sided power spectral density. Supposing that the $G(\omega)$ is known, in order to generate stationary Gaussian time series compatible with the given PSD, the following discrete mean square approximation for the sample functions of random process $y(t)$ is considered

$$y(t_i) \cong \tilde{y}(t_i) = \sum_{k=1}^{N} \rho_k x_k(t_i), \quad t_i = i\Delta t, \quad i = 1, 2, ..., M, \quad M\Delta t = T, \tag{1}$$

where

$$x_k(t_i) = A_k(t_i)\cos(\omega_k t_i + \theta_k), \; k = 1, ..., N \tag{2}$$

are discrete narrow-band stationary random signals with bandwidth centre frequencies ω_k. The time moments at which the positive peak values of $\cos(\omega_k t_i + \theta_k)$ occur, are given by

$$t_{kl} = \frac{2\pi l - \theta_k}{\omega_k}, \; k = 1, ..., N, \; l = 0, 1, 2, ..., l(k). \tag{3}$$

The random time series $A_k(t_i)$ are obtained by interpolation of positive peak values $A_k(t_{kl})$ of the components (2).

The random series $A_k(t_{kl})$ are generated as deviates of Rayleigh distributions with parameters λ_k. The phase angles θ_k are treated as random variables uniformly distributed on the interval $[0, 2\pi)$. Therefore, the distributions of discrete random signals (2) are Gaussian with zero mean values and variances λ_k. In order to generate the amplitude modulated random signals (2) within the same time interval $[t_0, T + t_0]$, it is sufficient to set the values of t_0 and $l(k)$ as the integer parts of $(2\pi/\omega_1 + 1)$ and $(T\omega_k/2\pi)$, respectively. Assuming that $x_k(t), k = 1, 2, 3, ..N$, approximate the random processes obtained by filtering $\tilde{y}(t)$ with band-pass filters having sharp cut-off characteristics in the frequency range $[\omega_k - \Delta\omega_k/2, \omega_k - \Delta\omega_k/2]$, the values of its power spectral density $\tilde{G}(\omega)$ at centre frequencies ω_k can be estimated by [10]:

$$\tilde{G}(\omega_k) = \frac{\tilde{\sigma}^2(\omega_k, \Delta\omega_k)}{\Delta\omega_k} = \frac{\lambda_k^2}{\Delta\omega_k}, \tag{4}$$

where $\tilde{\sigma}^2(\omega_k, \Delta\omega_k)$ is the mean square value of the kth filter output.

Hence, by imposing $\tilde{G}(\omega_k) = G(\omega_k)$ yields

$$\lambda_k = \sqrt{\Delta\omega_k \tilde{G}(\omega_k)}\,. \tag{5}$$

The weighting coefficients ρ_k, $k = 1,2,...,N$, are used in relation (1), in order to compensate the band-pass filtering effects on the values of parameters λ_k calculated from (4) and (5).

For generating sample functions of the random process $\tilde{y}(t)$, $0 \le t \le T$, the following algorithm is proposed:

Step 1. Choose a sampling time interval Δt in order to produce the Nyquist folding frequency higher than the highest frequency of practical interest in the given power spectral density $G(\omega)$.

Step 2. Generate N time series of independent random numbers $u_k(t_{kl})$, $k = 1,2,...,N$, $l = 0,1,2,...,l(k)$ uniformly distributed in $[0,1)$.

Step 3. Generate N independent time series of random deviates $A_k(t_{kl})$, $k = 1,2,...,N$, $l = 0,1,2,...,l(k)$ from Rayleigh distributions with parameters λ_k by using the inverse function of Rayleigh cumulative distribution:

$$A_k(t_{kl}) = \lambda_k \sqrt{-2\ln\left[1 - u_k(t_{kl})\right]}, \quad l = 0,1,2,...,l(k)\,. \tag{6}$$

Step 4. Generate a set of independent random numbers $\theta_k, k = 1,2,...,N$ uniformly distributed in the interval $[0,2\pi)$.

Step 5. Determine $A_k(t_i)$, $k = 1,2,...,N, i = 1,2,...,M$, by linear interpolation of $A_k(t_{kl})$.

Step 6. Generate the time series

$$\tilde{y}(t_i, \rho_1, ..., \rho_N) = \sum_{k=1}^{N} \rho_k A_k(t_i) \cos(\omega_k t_i + \theta_k)\,, \tag{7}$$

for an initial set of weighting coefficients values (e.g. $\rho_k = 1$, $k = 1,2,...,N$).

Step 7. Filter the generated sample time history (7) with the chosen band-pass filters and calculate the values of its spectral density at centre frequencies from

$$\tilde{G}(\omega_k) = \frac{\tilde{\sigma}^2(\omega_k, \Delta\omega_k)}{\Delta\omega_k}\,. \tag{8}$$

Step 8. Determine the values of weighting coefficients ρ_k, $k = 1,2,...,N$ by using an optimization procedure like genetic algorithms (GA) [13] or trial and error methods with respect to the criterion

$$\frac{\left|\tilde{G}(\omega_k) - G(\omega_k)\right|}{G(\omega_k)} < \varepsilon, \quad k = 1,2,...,N\,, \tag{9}$$

where ε is a convenient threshold for the relative error.

If a spectral analysis with constant percentage bandwidth filters is considered, than the ratio of two consecutive centre frequencies is constant, i.e.

$$\frac{\omega_{k+1}}{\omega_k} = \beta, \quad k = 1,2,...,N-1\,. \tag{10}$$

Therefore if the frequency range for spectral analysis is $[\omega_{\min}, \omega_{\max}]$ the total number of centre frequencies is

$$N \cong 1 + \frac{\log\omega_{\max} - \log\omega_{\min}}{\log\beta}\,. \tag{11}$$

3. APPLICATION OF THE SIMULATION METHOD

In the following applications of the proposed simulation method, the power spectral densities of simulated time histories are estimated from equation (4) by using third-octave band-pass filters centred at preferred frequencies defined in ISO R 266. Although nominal frequencies are used to identify the filters, the true centre frequencies of third octave filters are calculated from $10^{n/10}$, where $n = 0,1,2,...$ is the band number. The extending of preferred frequencies defined in ISO R 266 below 1 Hz can be obtained for negative integer values of n. Therefore, the ratio of two consecutive centre frequencies of third octave filters is $\beta = \frac{\omega_{k+1}}{\omega_k} = 10^{1/10} \cong 2^{1/3}$. In this case,

$$\omega_{\min} = 2\pi \cdot 10^{q/10} \text{ rad/s}, \ \omega_{\max} = 2\pi \cdot 10^{p/10} \text{ rad/s}, \tag{12}$$

where $p > q$ are integer numbers. The application of relation (11) yields

$$N = p - q + 1. \tag{13}$$

The proposed method is applied to simulate the road input with the target PSD expressed by a rational function of two polynomials of ω^2 [2, 3, 4, 15]:

$$G_{\mathrm{T}}(\omega) = \frac{2\sigma_{\mathrm{T}}^2}{\pi} \frac{aV\left[\omega^2 + (a^2 + b^2)V^2\right]}{\omega^4 + 2\left(a^2 - b^2\right)V^2\omega^2 + \left(a^2 + b^2\right)^2 V^4}, \tag{14}$$

where V is the running speed, a, b are coefficients depending on type of road and σ_{T} denotes the standard deviation of road irregularities. For numerical simulation was considered the PSD of a paved road input, given by (14) for the following values involved parameters [15]: $a = 0.32\text{m}^{-1}$, $b = 0.64\text{m}^{-1}$, $\sigma_{\mathrm{T}} = 1.7 \cdot 10^{-2}$ m, $V = 20\text{m/s}$.

By applying proposed method for the threshold of relative error $\varepsilon = 0.1$, the following values of weighting coefficients were obtained:

$$\begin{aligned} &\rho_1 = 1.12,\ \rho_2 = 1.57,\ \rho_3 = 1.1,\ \rho_4 = 1.2,\ \rho_5 = 1.07,\ \rho_6 = 1.08,\ \rho_7 = 1.1, \\ &\rho_8 = 1.03,\ \rho_9 = 1.13,\ \rho_{10} = 1.08,\ \rho_{11} = 1.05,\ \rho_{12} = 1,\ \rho_{13} = 1,\ \rho_{14} = 1.05, \\ &\rho_{15} = 1.1,\ \rho_{16} = 1.1,\ \rho_{17} = 1.1,\ \rho_{18} = 1.05,\ \rho_{19} = 1.15,\ \rho_{20} = 1.16,\ \rho_{21} = 1.25. \end{aligned} \tag{15}$$

The results are presented in Figs. 1 and 2, where subscripts T and R denote the target PSD and the simulated functions obtained by using Rayleigh distribution.

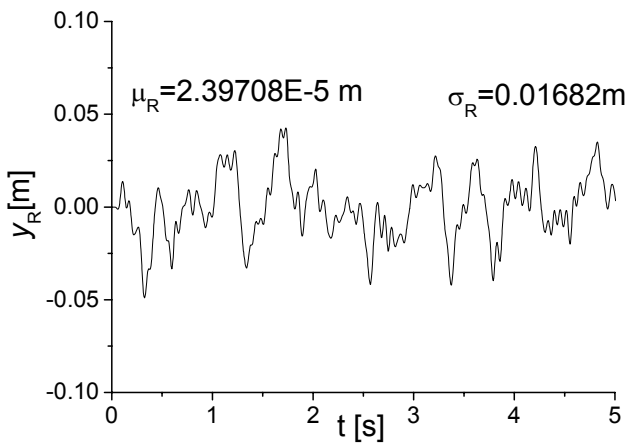

Fig. 1 – Sample of simulated road input for target PSD.

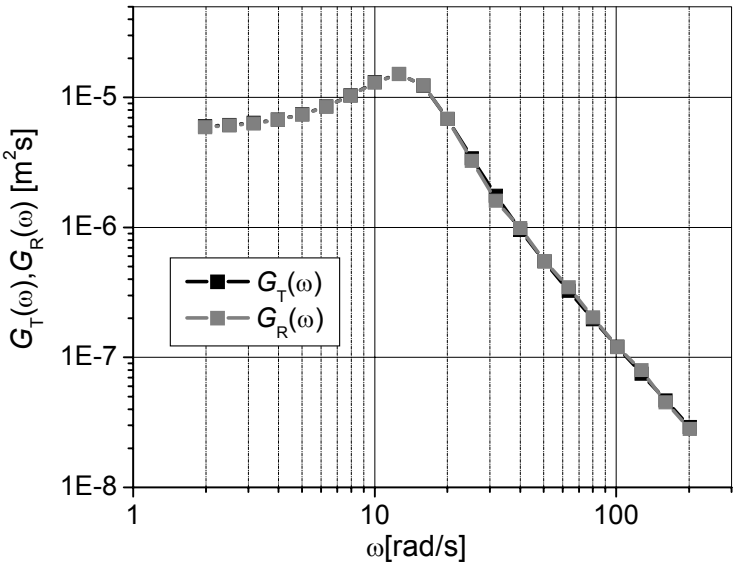

Fig. 2 – Target PSD and approximate PSD, $G_R(\omega)$, obtained from simulated road input.

4. VALIDATION OF SIMULATION METHOD THROUGH THE OF RESPONSE OF A QUARTER CAR MODEL

In this section, the quarter-car model shown in Fig. 3 is used to compare the vehicle response to the above generated road profile input with that obtained analytically by using input-output relationships for linear physical systems. The vehicle is assumed to travel at a constant forward speed V. It is also assumed that the road-tire contact is a point that follows the road profile at all times.

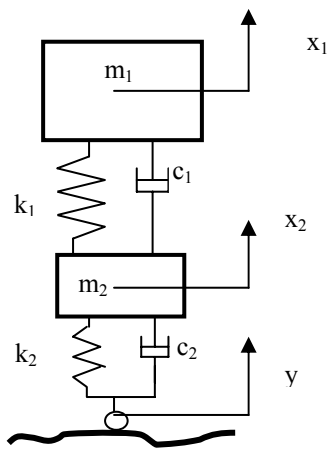

Fig. 3 – The quarter-car model of the vehicle.

The equations of motion can be written as

$$\begin{aligned} &m_1\ddot{x}_1 + c_1\left(\dot{x}_1 - \dot{x}_2\right) + k_1\left(x_1 - x_2\right) = 0 \\ &m_2\ddot{x}_2 - c_1\left(\dot{x}_1 - \dot{x}_2\right) + c_2\left(\dot{x}_2 - \dot{y}\right) - k_1\left(x_1 - x_2\right) + k_2\left(x_2 - y\right) = 0, \end{aligned} \tag{16}$$

where $y(t)$ is the road input for a travelling speed V.

The matrix of frequency response functions of system (16) is obtained as [5, 9, 15]

$$\mathbf{H}_{\mathrm{xy}}(\omega) = -\left[-\omega^2\mathbf{M} + \mathrm{i}\omega\mathbf{C} + \mathbf{K}\right]^{-1} \cdot \left[\mathrm{i}\omega\mathbf{C}_0 + \mathbf{K}_0\right], \tag{17}$$

where the matrices $\mathbf{M}, \mathbf{C}, \mathbf{K}, \mathbf{C}_0, \mathbf{K}_0$ are given by

$$\mathbf{M} = \begin{vmatrix} m_1 & 0 \\ 0 & m_2 \end{vmatrix}, \ \mathbf{C} = \begin{vmatrix} c_1 & -c_1 \\ -c_1 & c_1 + c_2 \end{vmatrix}, \ \mathbf{K} = \begin{vmatrix} k_1 & -k_1 \\ -k_1 & k_1 + k_2 \end{vmatrix}, \ \mathbf{C}_0 = \begin{vmatrix} 0 \\ -c_2 \end{vmatrix}, \ \mathbf{K}_0 = \begin{vmatrix} 0 \\ -k_2 \end{vmatrix}. \tag{18}$$

The matrix of frequency response functions the quarter car model can be given the form

$$\mathbf{H}_{\mathrm{xy}}(\omega) = \begin{bmatrix} H_{\mathrm{x_1 y}}(\omega) \\ H_{\mathrm{x_2 y}}(\omega) \end{bmatrix}. \tag{19}$$

The output spectral density matrix is obtained from [9, 10, 14].

$$\mathbf{G}_{\mathrm{x}}(\omega) = \begin{vmatrix} G_{\mathrm{x_1}}(\omega) & G_{\mathrm{x_1 x_2}}(\omega) \\ G_{\mathrm{x_2 x_1}}(\omega) & G_{\mathrm{x_2}}(\omega) \end{vmatrix} = \overline{\mathbf{H}_{\mathrm{xy}}(\omega)}\ G_{\mathrm{y}}(\omega)\ \mathbf{H}^{\mathrm{T}}_{\mathrm{xy}}(\omega). \tag{20}$$

The r.m.s. values of the absolute acceleration of sprung and unsprung masses can be calculated from

$$\sigma_{\ddot{x}_1} = \sqrt{\int_{\omega_{\min}}^{\omega_{\max}} \omega^4 G_{\mathrm{x}_1}(\omega)\mathrm{d}\omega}, \ \sigma_{\ddot{x}_2} = \sqrt{\int_{\omega_{\min}}^{\omega_{\max}} \omega^4 G_{\mathrm{x}_2}(\omega)\mathrm{d}\omega}. \tag{21}$$

The r.m.s. sprung mass acceleration is considered as a ride quality parameter, while the r.m.s. value of dynamic road-tire contact force $F_{\mathrm{c}}(t) = k_2\left[x_2(t) - y(t)\right]$ is used for road holding assessment. The frequency response function of road-tire contact force can be written as

$$H_{\mathrm{F_c y}}(\omega) = k_2\left[H_{\mathrm{x_2 y}}(\omega) - 1\right]. \tag{22}$$

The power spectral density and r.m.s. value of the contact force are given by:

$$G_{\mathrm{F_c}}(\omega) = \left|H_{\mathrm{F_c y}}(\omega)\right|^2 G_{\mathrm{y}}(\omega), \ \sigma_{\mathrm{F_c}} = \sqrt{\int_{\omega_{\min}}^{\omega_{\max}} G_{\mathrm{F_c}}(\omega)\mathrm{d}\omega}. \tag{23}$$

Neglecting the tire internal damping, the vehicle system parameters for the quarter-car model are given in Table 1. They are typical for a medium size passenger car [15].

Table 2

m_1[kg]	m_2[kg]	k_1[N/m]	k_2[N/m]	c_1[Ns/m]	c_2[Ns/m]
265	31.5	11 370	167 000	835	0

The system amplification factors $\left|H_{\mathrm{x_1 y}}(\omega)\right|$, $\left|H_{\mathrm{x_2 y}}(\omega)\right|$ and $\left|H_{\mathrm{F_c y}}(\omega)\right| / k_2$ are plotted in Fig. 4.

Considering the target PSD given by (14) and previously simulated sample function $y_{\mathrm{R}}(t)$ as the input of the quarter car model shown in Fig. 3, the system outputs $x_{1\mathrm{R}}(t)$, $x_{2\mathrm{R}}(t)$ were obtained by numerical integration of the equations (16) and their power spectral densities $G_{\mathrm{x_1 R}}(\omega), G_{\mathrm{x_2 R}}(\omega)$ were determined by filtering method using the same set of third-octave filters. Next, the relation $(23)_1$ yields the spectral density $G_{F_{\mathrm{c}}\mathrm{R}}(\omega)$. Figure 5 shows comparatively the predicted and simulated power spectral densities.

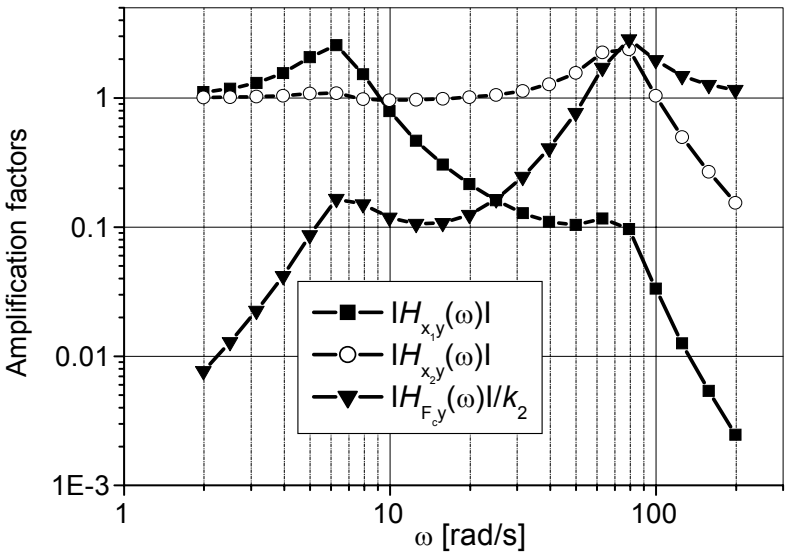

Fig. 4 – Amplification factors of quarter-car model.

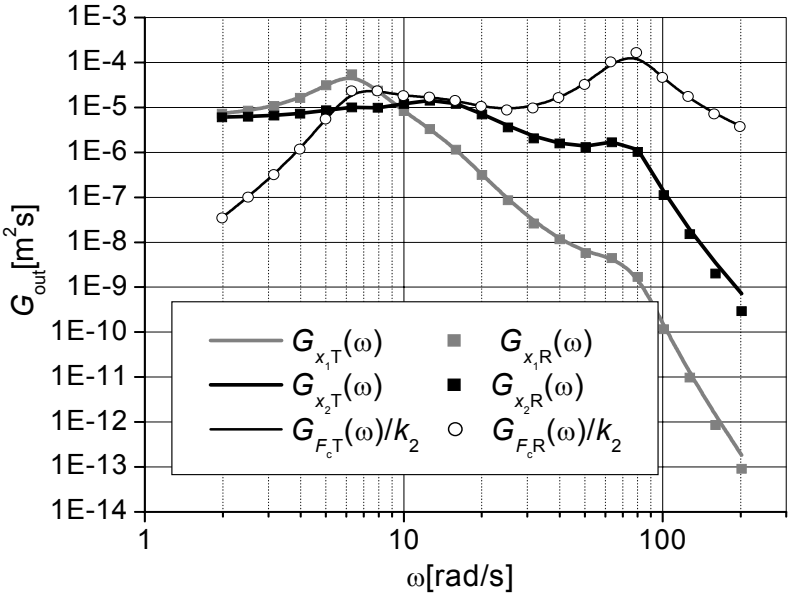

Fig. 5 – Predicted and simulated output power spectral densities.

The mean square of the simulated absolute accelerations and road-tire contact force can be derived straightforward from (21) and $(23)_2$. The results are shown in Table 2.

Table 2

RMS output	$\sigma_{\ddot{x}_1}\left[\mathrm{m/s^2}\right]$	$\sigma_{\ddot{x}_2}\left[\mathrm{m/s^2}\right]$	$\sigma_{F_c}\left[\mathrm{kN}\right]$
Predicted	2.28	43.9	1.433
Simulated	2.21	41.1	1.432

The results presented in Fig. 5 and Table 2 show that the proposed method for generation of time series compatible with a given PSD can provide a sufficient statistical description of a road input as a realization of a Gaussian stationary random process with zero-mean value. Therefore, the simulated sample functions can be used to determine the response of a vehicle traversing the road by means of analytical or numerical simulation methods.

5. CONCLUSIONS

In this paper, an effective approach to the simulation of wide-sense stationary random time series, defined by its PSD, is presented. A sample function of the target random process is represented by a superposition of weighted statistically independent sine waves with uniformly distributed phase angles and random envelopes following Rayleigh distributions. As all components of this representation are deviates from Gaussian distributions, the sampling distribution function of the resulting random time series approaches a Gaussian distribution for reasonable large number of frequencies chosen within the effective frequency bandwidth of target PSD. The proposed method gives the possibility to simulate with good accuracy time series compatible with any given analytical expression or experimental data for power spectral density.

The method is illustrated by the simulation of road input with specified rational power spectral density. The results show a good agreement between the power spectral density of the generated road input and the target one. The method is validated through comparison of the predicted response of a quarter car model for the given road input PSD with that obtained for the simulated road input compatible with the same PSD.

REFERENCES

1. T.K. Caughey, *Nonlinear Theory of Random Vibrations*, Advances in Applied Mechanics, **11**, pp. 209–253, 1971.
2. A. Hac, *Adaptive control of vehicle suspension*, Vehicle System Dynamics, **16**, pp. 57–74, 1987.
3. D. Stăncioiu, T. Sireteanu, M. Giuclea and A.M. Mitu, *Simulation of random road profiles with specified spectral density*, Proceedings of the Annual Symposium of the Institute of Solid Mechanics, Bucharest, Romania, pp. 331–338, 2003.
4. F. Tyan, Y.-F. Hong, S.-H. Tu and W. S. Jent, *Generation of random road profiles*, Journal of Advanced Engineering, pp. 1373–1378, 2009.
5. S. Turkay and H. Akcay, *A study of random vibration characteristics of the quarter-car model,* Journal of Sound and Vibration, **282**, pp. 111–124, 2005.
6. International Organization for Standardization, *Mechanical vibration-road surface profiles – reporting of measured data*, ISO 8608, 1995.
7. S. O. Rice, *Mathematical analysis of random noise*, in: N. Wax (Ed.), *Selected Papers on Noise and Stochastic Processes*, New York, Dover Publications Inc., 1954, pp. 180–181.
8. M. Shinozuka and C.-M. Jan, *Digital simulation of random processes and its applications*, Journal of Sound and Vibration, **25**, pp. 111–128, 1972.
9. G. Verros, S. Natsiavas and C. Papadimitriou, *Design optimization of quarter-car models with passive and semi-active suspensions under random road excitation*, Journal of Vibration and Control, **11**, pp. 581–606, 2005.
10. Y.K.Lin, *Probabilistic Theory of Structural Dynamics*, McGraw-Hill Inc., New York, 1967.
11. J.S. Bendat and A.G. Piersol, *Random Data: Analysis and Measurement Procedures*, John Wiley&Sons, Inc., NewYork, 1971.
12. W.A. Gardner, *Introduction to Random Processes with Applications to Signals and Systems*, McGraw-Hill Inc.,New York, 1989.
13. Z. Michalewicz, *Genetic Algorithms + Data Structures = Evolution Programs*, Springer Verlag, 1992.
14. C.J. Dodds and J.D. Robson, *The Description of Road Surface Roughness*, Journal of Sound and Vibration, **31**, pp. 175–184, 1973.
15. T. Sireteanu, O. Gündisch and S. Părăianu, *Random vibrations of automobiles*, Edit. Tehnică, Bucharest, 1981.

Received February 7, 2014